9.4 Mini Trolley Parts

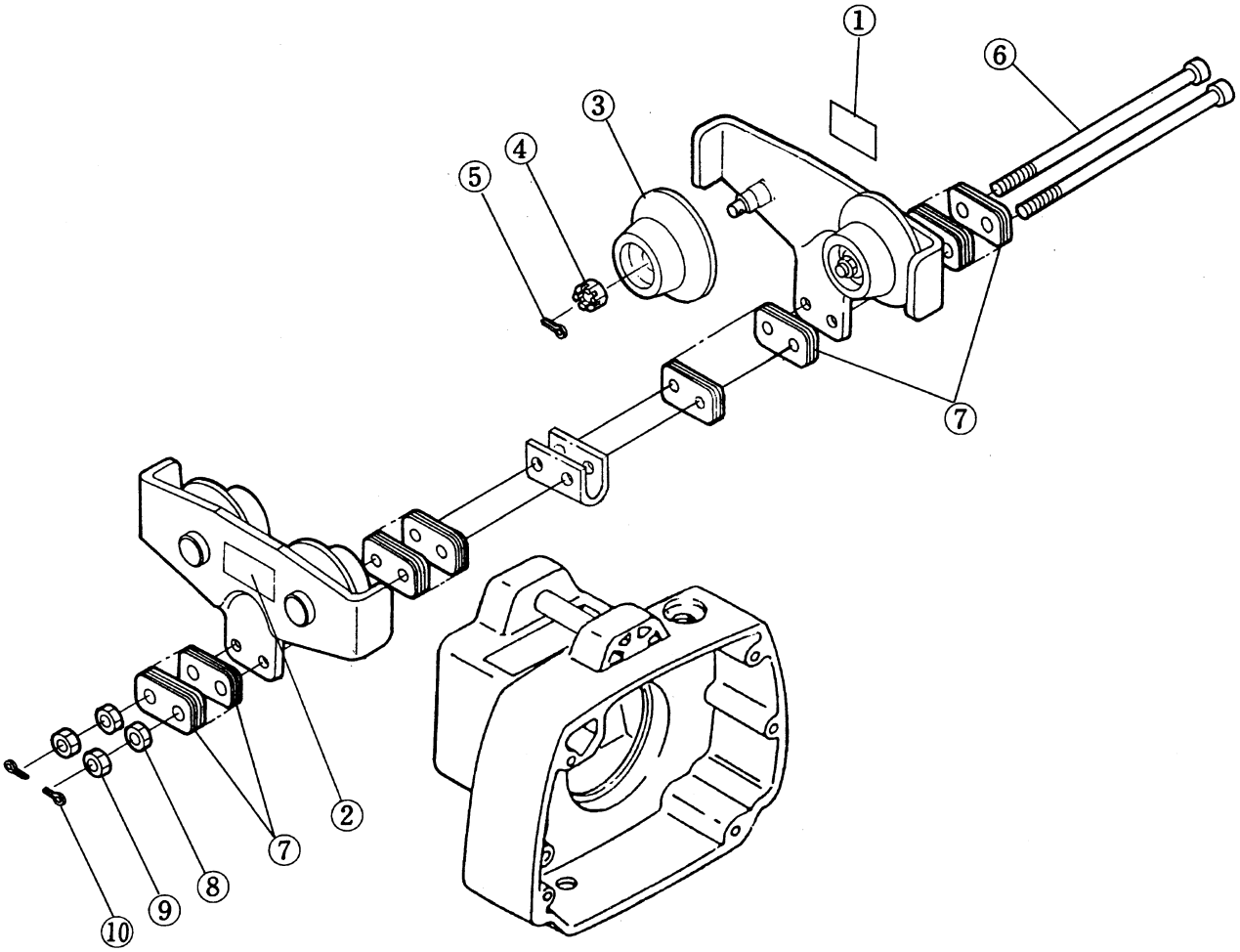

FIGURE 9-4 MINI TROLLEY PARTS

9.4 Mini Trolley Parts

Fig. No.	Part Name	Parts Per Hoist	Capacity (525lbs.)
1	Name Plate C	1	ET25801525
2	Name Plate B	1	ET25800525
3	Track Wheel Assembly	4	ET255102525
4	Slotted Nut	4	M2049010
5	Split Pin	4	9009411
6	Socket bolt	2	ET25115525
7	Adjusting Spacer	32	ET25116525
8	Nut	2	9093424
9	U Nut	2	ET25155525
10	Split Pin	2	9009411